Connection to the future

article#	**692-4v**
article description	**CEE-flanged plug straight 70x70mm 32A 2p 24/42VAC 100-200Hz IP44 TWIST**
description long	CEE-flanged plug straight 70x70mm 32A 2p 24/42VAC 100-200Hz IP44 TWIST housing material: PA6 rated current: 32A number of poles: 2 (2P) clock-position: 4h rated voltage/frequency: 24/42V~ / 100-200Hz contacts: brass nickel plated connection technology: screw terminals dimensions (flange/fixing center): 70x70 mm / 56x56 mm IP protection class: IP44
GTIN (EAN)	9003399224416
country of origin	AT
customs number	85366990
net weight	0.074 kg
packaging quantitiy	10
minimum order quantitiy	10

ETIM 9.0	EC001319
IEC-amperage	32 A
Voltage according to EN 60309-2	20-25 V / 40-50 V (100-200 Hz) green
Number of poles	2
Clock hour position	4 h
Identification colour	Green
Degree of protection (IP)	IP44
Connection system	Screwed terminal
Construction type	Built-up device plug
Angle of plug	Straight
Material	Plastic
Contact material	CuZn
Surface treatment contacts	Nickel-plated

a	70 mm
b	70 mm
c	56 mm
d	56 mm
e	19 mm
f	28 mm
g	5 mm
h	43 mm
wire flexible	4-10 mm²
wire solid	4-10 mm²
contact screws	110 Ncm
dismantling length	70 mm
stripping length	14-16 mm
ambient temperature	-25 – 40 °C
temperature resistance	-25 – 80 °C

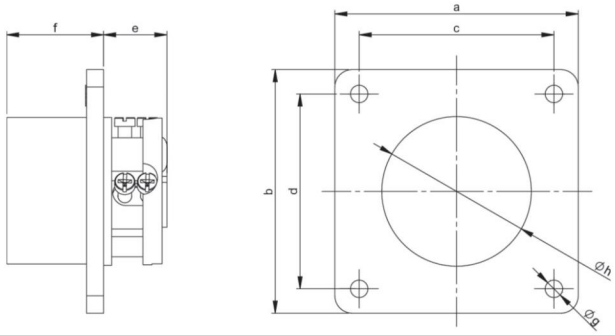

https://www.pcelectric.at/shop/en/?func=detail&artnr=692-4v

Changes and printing errors reserved!

12/18/2024