Connection to the future

article#	**682-11v**
article description	**CEE-flanged plug straight 70x70mm 16A 2p 24/42VAC >400-500Hz IP44 TWIST**
description long	CEE-flanged plug straight 70x70mm 16A 2p 24/42VAC >400-500Hz IP44 TWIST housing material: PA6 rated current: 16A number of poles: 2 (2P) clock-position: 11h rated voltage/frequency: 24/42V~ / >400-500Hz contacts: brass nickel plated connection technology: screw terminals dimensions (flange/fixing center): 70x70 mm / 56x56 mm IP protection class: IP44
country of origin	AT
customs number	85366990
packaging quantitiy	10
minimum order quantitiy	10

ETIM 9.0	EC001319
IEC-amperage	16 A
Voltage according to EN 60309-2	20-25 V / 40-50 V (>400-500 Hz) green
Number of poles	2
Clock hour position	11 h
Identification colour	Green
Degree of protection (IP)	IP44
Connection system	Screwed terminal
Construction type	Built-up device plug
Angle of plug	Straight
Material	Plastic
Contact material	CuZn
Surface treatment contacts	Nickel-plated

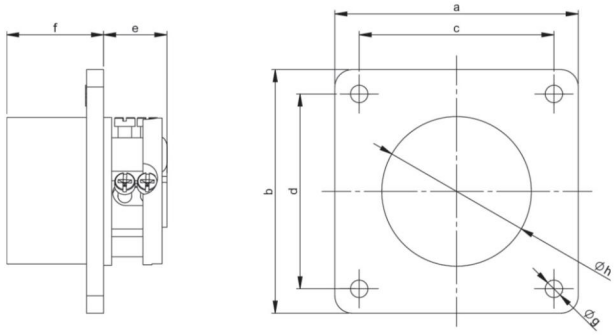

a	70 mm
b	70 mm
c	56 mm
d	56 mm
e	19 mm
f	28 mm
g	5 mm
h	43 mm
wire flexible	4-10 mm²
wire solid	4-10 mm²
contact screws	110 Ncm
dismantling length	70 mm
stripping length	14-16 mm
ambient temperature	-25 – 40 °C
temperature resistance	-25 – 80 °C

https://www.pcelectric.at/shop/en/?func=detail&artnr=682-11v

Changes and printing errors reserved!

(C) PC ELECTRIC Ges.m.b.H. - Diesseits 145 - 4973 St. Martin i.I. - Austria - www.pcelectric.at