Connection to the future

article#	**573v**
article description	**CEE-wall mounted plug 32A 3p 24VAC 50/60Hz IP44 TWIST**
description long	CEE-wall mounted plug 32A 3p 24VAC 50/60Hz IP44 TWIST housing material: PA6 rated current: 32A number of poles: 3 (3P) rated voltage/frequency: 24V~ / 50+60Hz contacts: brass nickel plated connection technology: screw terminals IP protection class: IP44
GTIN (EAN)	9003399213274
country of origin	AT
customs number	85366990
net weight	0.194 kg
packaging quantitiy	10
minimum order quantitiy	10

ETIM 9.0	EC001319
IEC-amperage	32 A
Voltage according to EN 60309-2	20-25 V (50+60 Hz) violet
Number of poles	3
Identification colour	Purple
Degree of protection (IP)	IP44
Connection system	Screwed terminal
Construction type	Surface mounted device plug
Angle of plug	Angled
Material	Plastic
Contact material	CuZn
Surface treatment contacts	Nickel-plated

a	106 mm
b	77 mm
wire flexible	4-10 mm²
wire solid	4-10 mm²
contact screws	110 Ncm
housing screws	110 Ncm
connecting screws	110 Ncm
dismantling length	70 mm
stripping length	14-16 mm
ambient temperature	-25 – 40 °C
temperature resistance	-25 – 80 °C

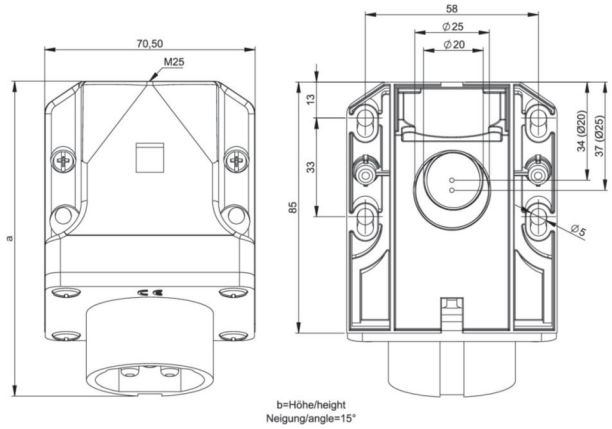

https://www.pcelectric.at/shop/en/?func=detail&artnr=573v

Changes and printing errors reserved!
12/18/2024