Connection to the future

article#	**4132-6ttf8**
article description	**CEE-flanged socket sloping (80x97mm) 16A 3p 6h IP67 TT**
description long	CEE-flanged socket sloping (80x97mm) 16A 3p 6h IP67 TT housing material: PA6 rated current: 16A number of poles: 3 (2P+PE) clock-position: 6h rated voltage/frequency: 200-250V~ / 50+60Hz contacts: brass connection technology: screwless terminals (TT) dimensions (flange/fixing center): 80x97 mm / 60x73 mm IP protection class: IP67
GTIN (EAN)	9003399090325
country of origin	AT
customs number	85366990
net weight	0.134 kg
packaging quantitiy	10
minimum order quantitiy	10

ETIM 9.0	EC001317
IEC-amperage	16 A
Voltage according to EN 60309-2	230 V (50+60 Hz) blue
Number of poles	3
Clock hour position	6 h
Identification colour	Blue
Degree of protection (IP)	IP67
Connection system	Screw less terminal
Angle of plug	Angled
Material	Plastic
Contact material	CuZn
Surface treatment contacts	Untreated
Flange size vertical	97 mm
Drill hole distance vertical	73 mm
Flange size horizontal	80 mm
Drill hole distance horizontal	60 mm

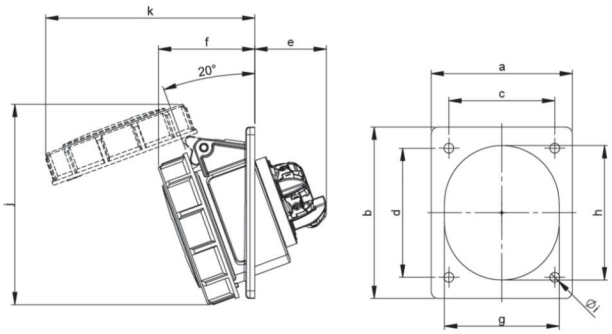

a	80 mm
b	97 mm
c	60 mm
d	73 mm
e	41 mm
f	50 mm
g	51 mm
h	61 mm
i	5,5 mm
j	102 mm
k	103 mm
wire flexible	1-2,5 mm²
wire solid	1-4 mm²
dismantling length	50 mm
stripping length	10-12 mm
ambient temperature	-25 – 40 °C
temperature resistance	-25 – 80 °C

https://www.pcelectric.at/shop/en/?func=detail&artnr=4132-6ttf8

Changes and printing errors reserved!

8/2/2023