article#	**1822-2v**
article description	**CEE-wall mounted socket 16A 2p 24/42VAC 300Hz IP66/IP67 TWIST**
description long	CEE-wall mounted socket 16A 2p 24/42VAC 300Hz IP66/IP67 TWIST housing material: PA6 rated current: 16A number of poles: 2 (2P) clock-position: 2h rated voltage/frequency: 24/42V~ / 300Hz contacts: brass nickel plated connection technology: screw terminals IP protection class: IP66/IP67
country of origin	AT
customs number	85366990
packaging quantitiy	10
minimum order quantitiy	10

ETIM 9.0	EC001321
IEC-amperage	16 A
Number of poles	2
Voltage according to EN 60309-2	20-25 V / 40-50 V (300 Hz) green
Clock hour position	2 h
Identification colour	Green
Degree of protection (IP)	IP67
Connection system	Screwed terminal
Cable entry	Gland nut
Material	Plastic
Contact material	CuZn
Surface treatment contacts	Nickel-plated
Type of fastening	External mounting
Insulated mounting	True

a	143 mm
b	95 mm
wire flexible	1-10 mm²
wire solid	1,5-10 mm²
contact screws	160 Ncm
connecting screws	110 Ncm
dismantling length	70 mm
stripping length	14-16 mm
ambient temperature	-25 – 40 °C
temperature resistance	-25 – 80 °C

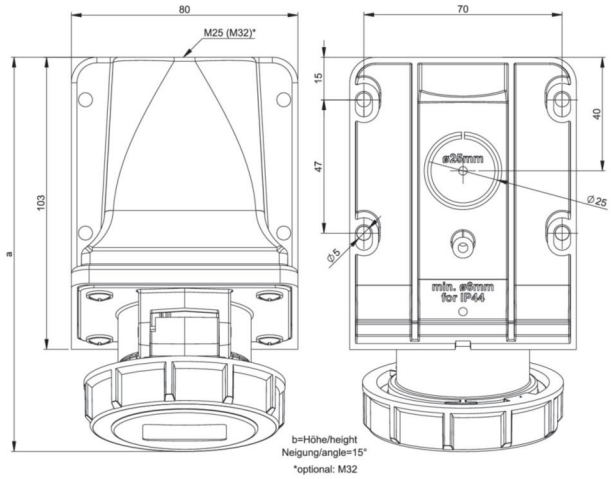

https://www.pcelectric.at/shop/en/?func=detail&artnr=1822-2v

Changes and printing errors reserved!

8/2/2023