article#	**113-6ttk**
article description	**CEE wall mounted socket (compact) 16A 3p 6h IP44 TT**
description long	CEE wall mounted socket (compact) 16A 3p 6h IP44 housing material: PA6 rated current: 16A number of poles: 3 (2P+PE) clock-position: 6h rated voltage/frequency: 200-250V~ / 50+60Hz contacts: brass connection technology: screwless terminals (TT) cable entry: top and rear inc. threaded cable grommet IP protection class: IP44
GTIN (EAN)	9003399581342
country of origin	AT
customs number	85366990
net weight	0.210 kg
packaging quantitiy	10
minimum order quantitiy	10

ETIM 9.0	EC001321
Model	Surface mounted
IEC-amperage	16 A
Number of poles	3
Voltage according to EN 60309-2	230 V (50+60 Hz) blue
Clock hour position	6 h
Identification colour	Blue
Degree of protection (IP)	IP44
Connection system	Screw less terminal
Cable entry	Gland nut
Material	Plastic
Contact material	CuZn
Surface treatment contacts	Untreated
Type of fastening	External mounting

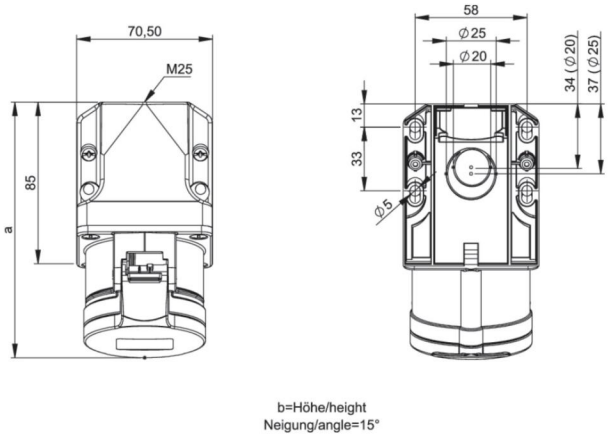

a	132 mm
b	94 mm
wire flexible	1-2,5 mm²
wire solid	1-4 mm²
housing screws	110 Ncm
connecting screws	110 Ncm
dismantling length	50 mm
stripping length	10-12 mm
ambient temperature	-25 – 40 °C
temperature resistance	-25 – 80 °C

https://www.pcelectric.at/shop/en/?func=detail&artnr=113-6ttk

Changes and printing errors reserved!

4/29/2024